10390181

INDEX

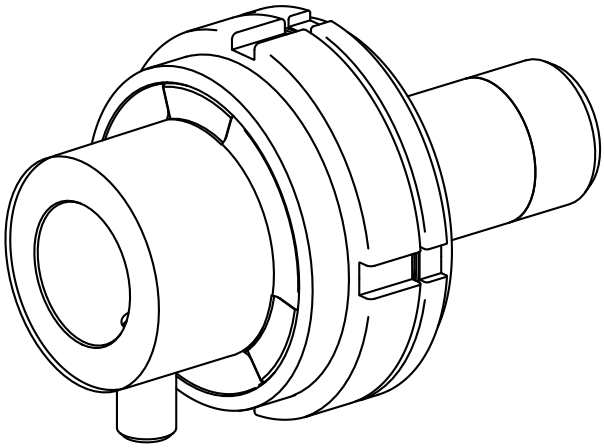

1"

10390181

INDEX

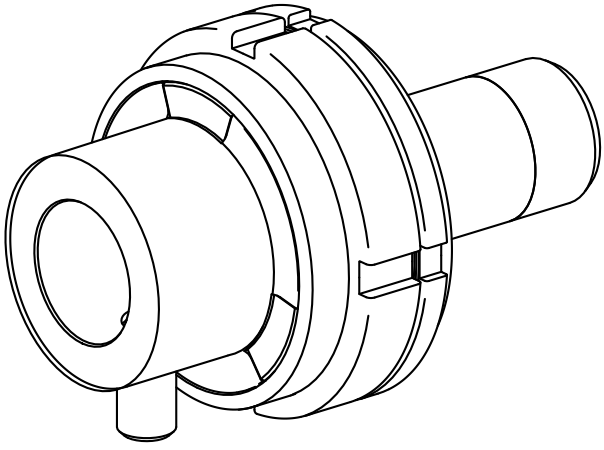

1"