12092674

INDEX

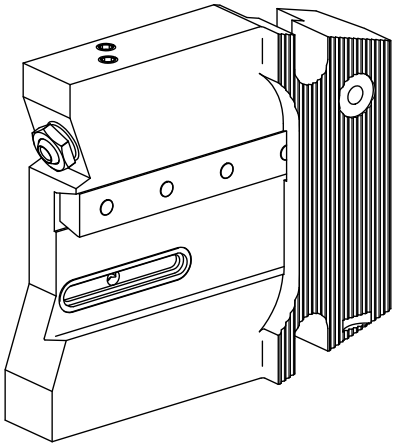

12092674
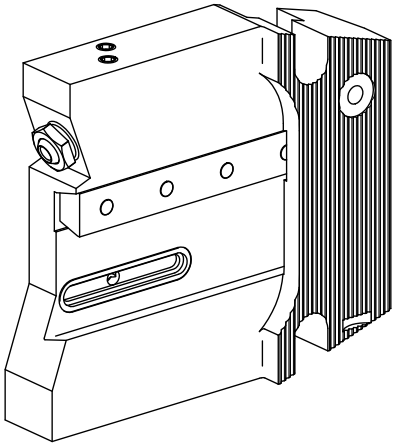
INDEX