12035623

INDEX

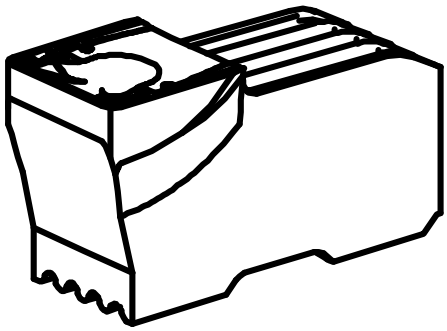

Cutting tools

12035623

INDEX

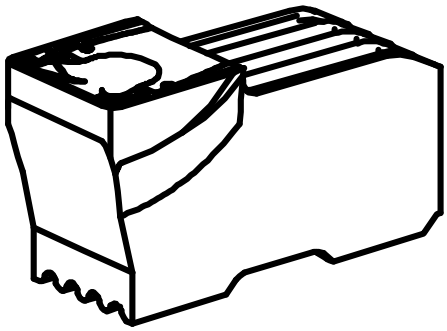

Cutting tools