10303258

INDEX

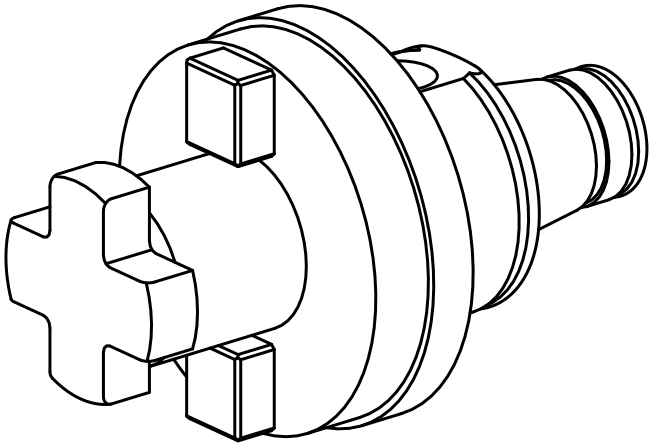

WFB 32-20

10303258

INDEX

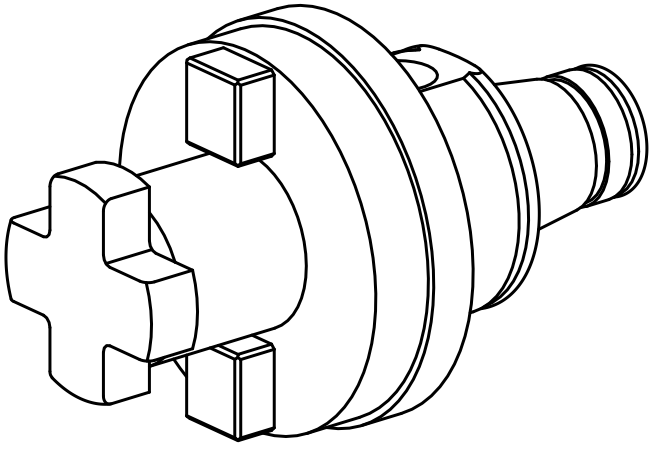

WFB 32-20