10901575

INDEX

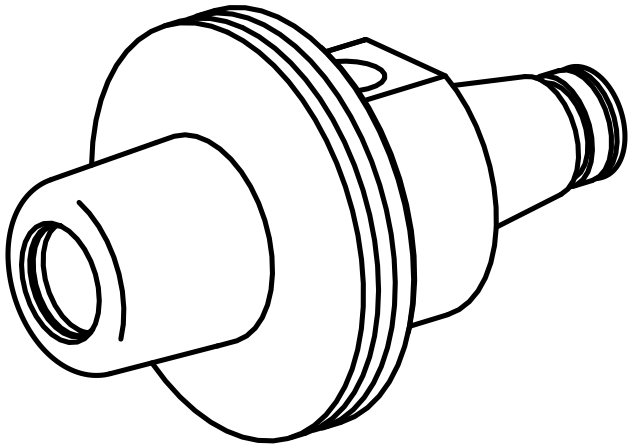

WFB 20-12

10901575

INDEX

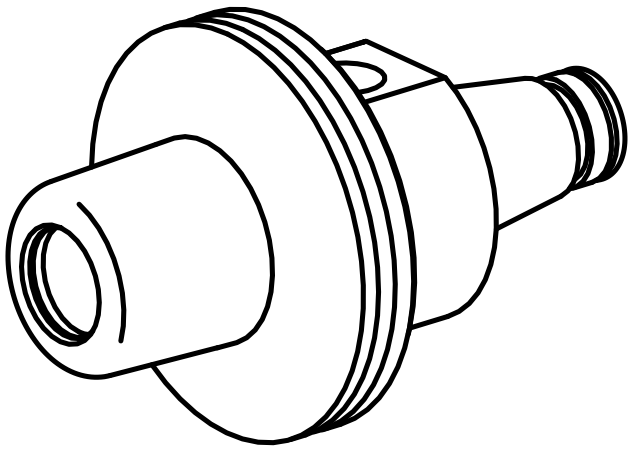

WFB 20-12