11061978

INDEX

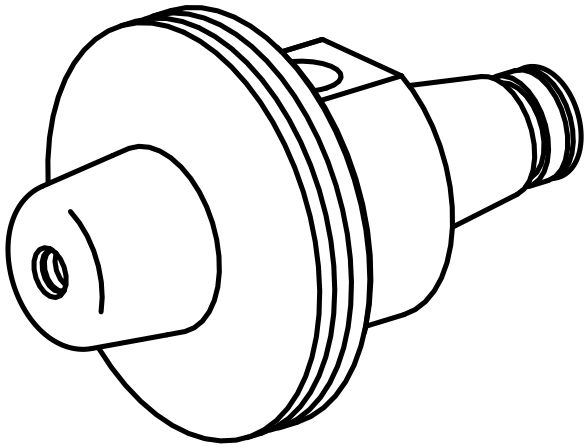

WFB 20-12

11061978

INDEX

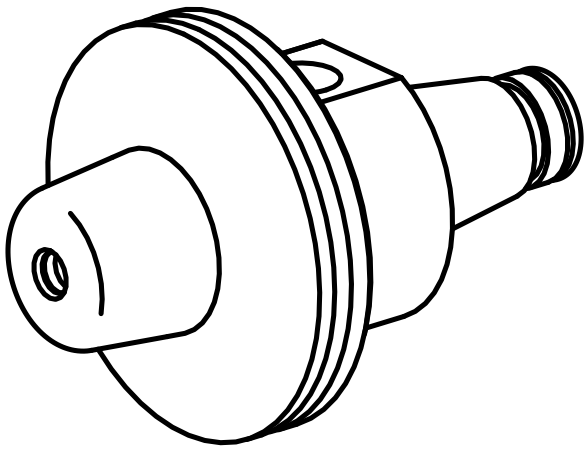

WFB 20-12