10658782

INDEX

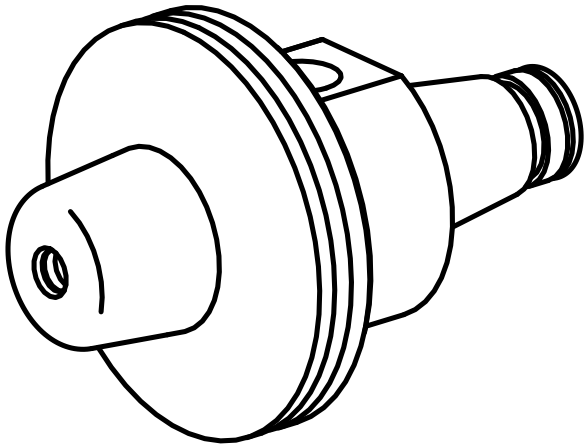

WFB 20-12

10658782

INDEX

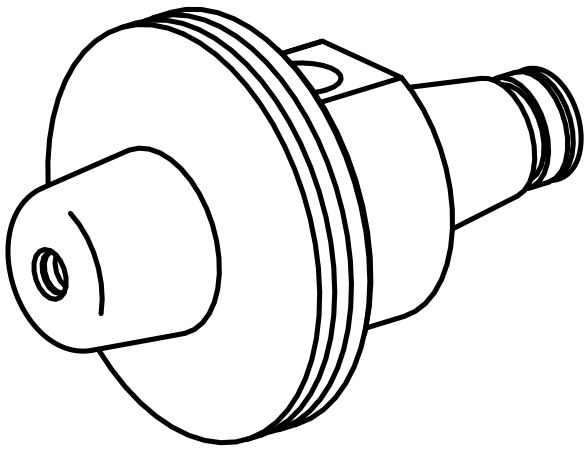

WFB 20-12