10191258

INDEX

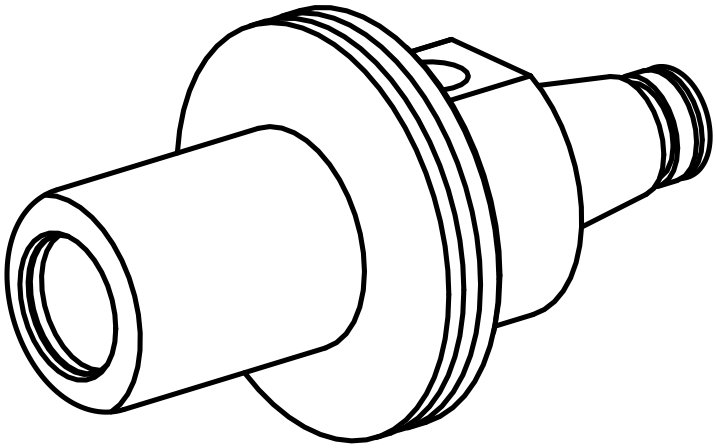

WFB 20-12

10191258

INDEX

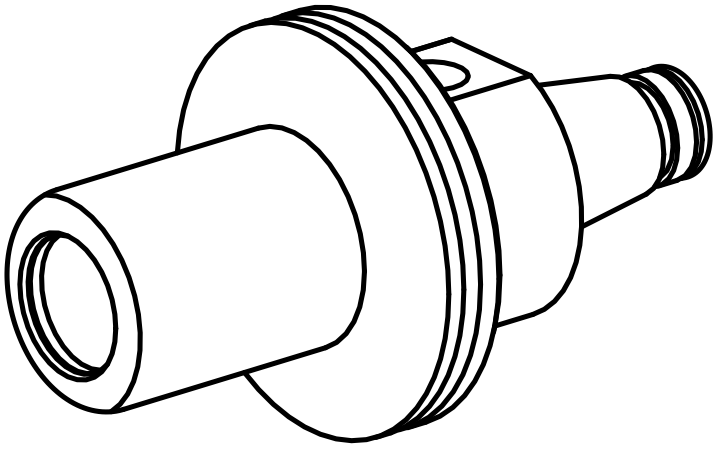

WFB 20-12