10521877

INDEX

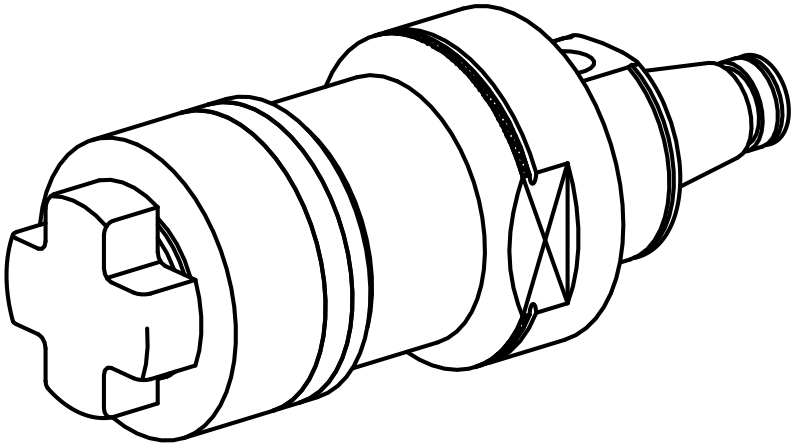

WFB 20-12

10521877

INDEX

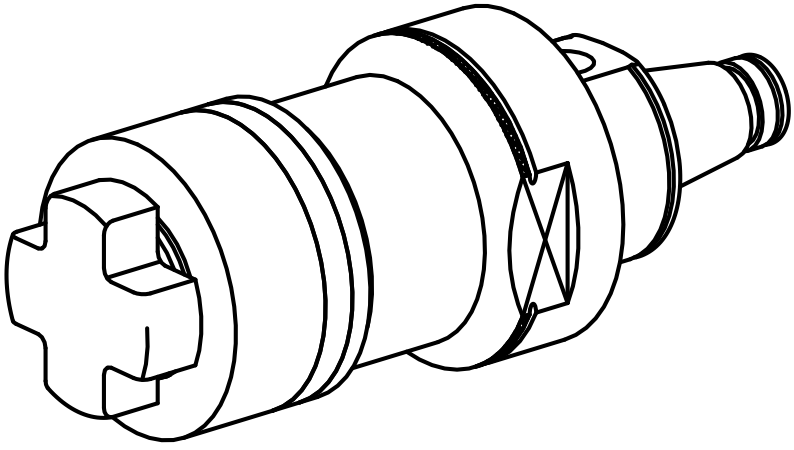

WFB 20-12