10236716

INDEX

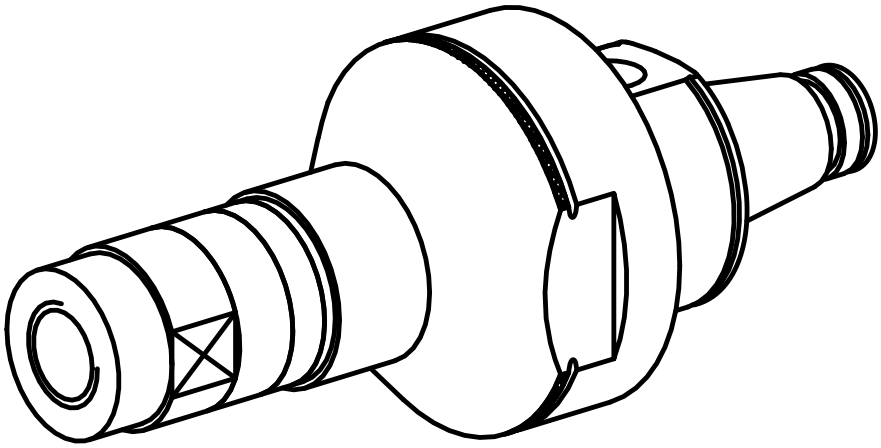

WFB 20-12

10236716

INDEX

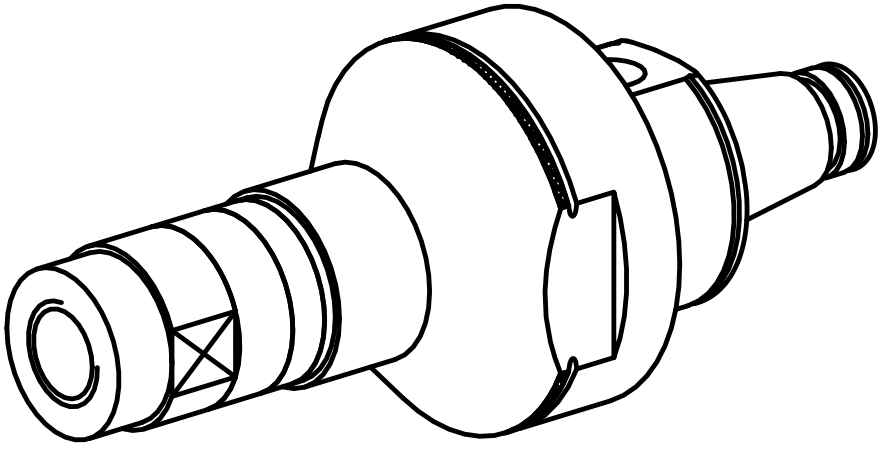

WFB 20-12