10789970

INDEX

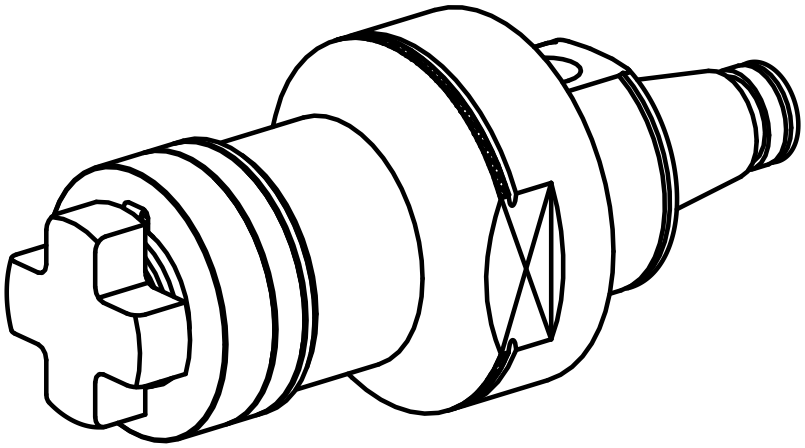

WFB 20-12

10789970

INDEX

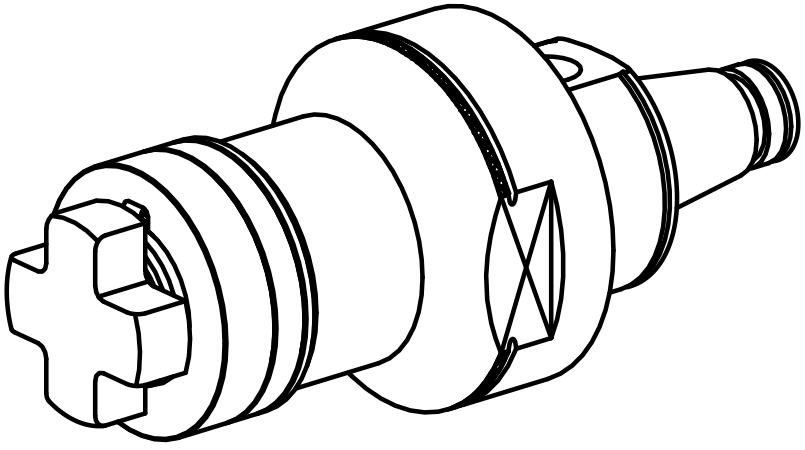

WFB 20-12