10913381

INDEX

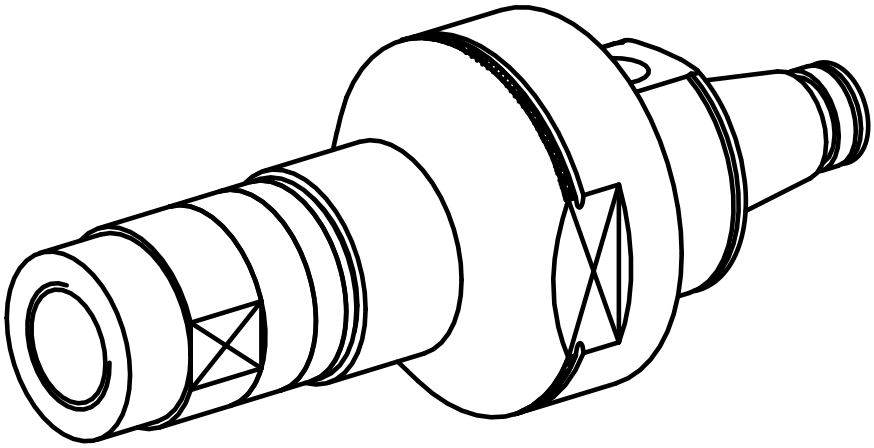

WFB 20-12

10913381

INDEX

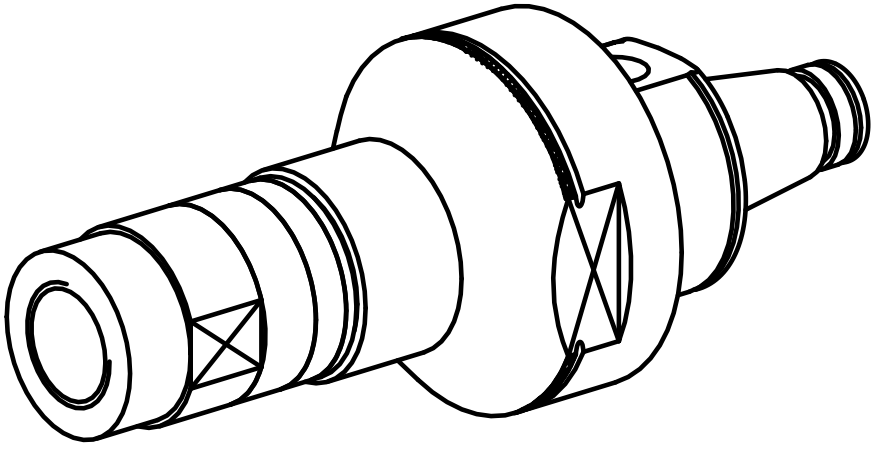

WFB 20-12