12122971

INDEX

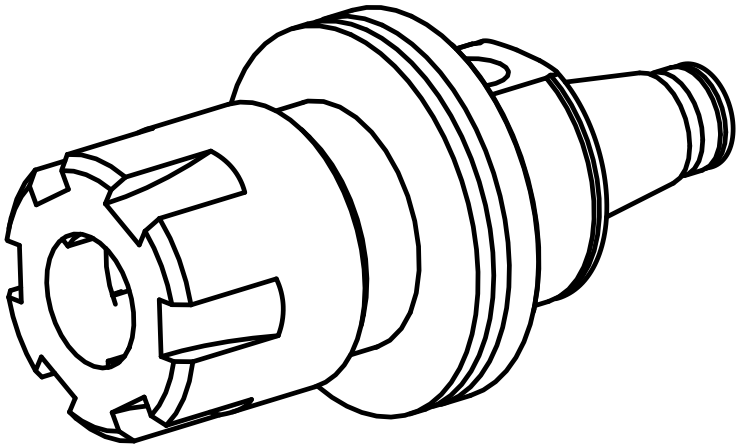

WFB 20-12

12122971

INDEX

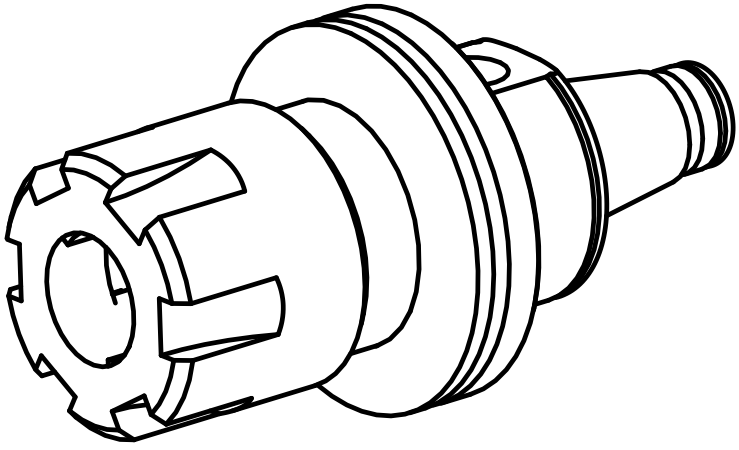

WFB 20-12