10477879

INDEX

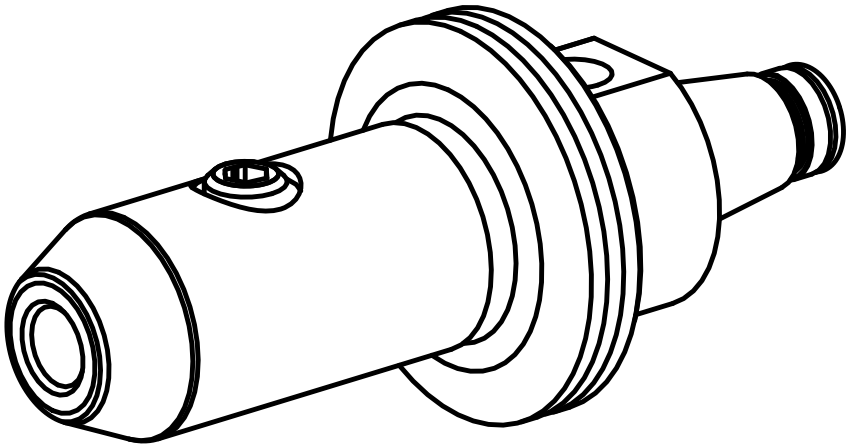

WFB 20-12

10477879

INDEX

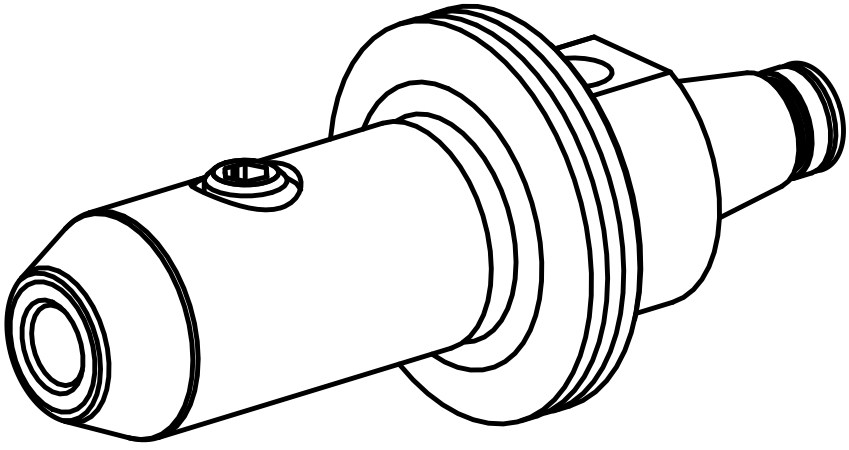

WFB 20-12