11033614

INDEX

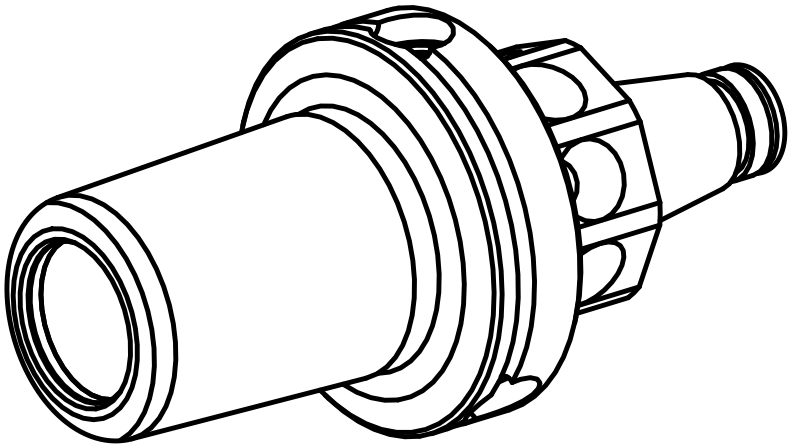

WFB 20-12

11033614

INDEX

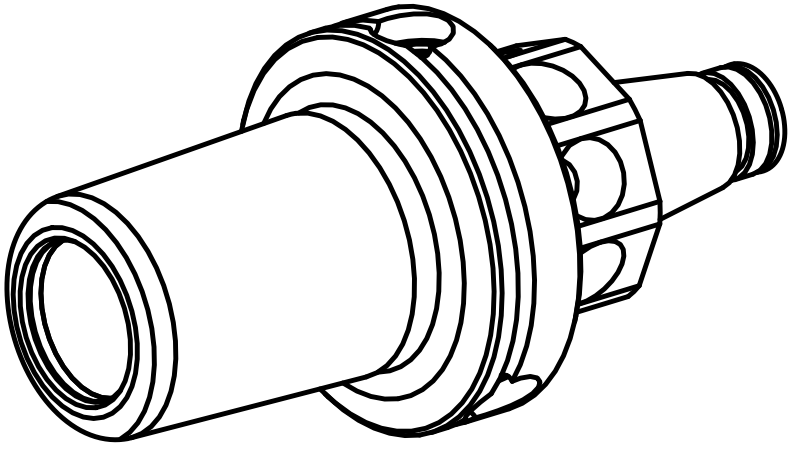

WFB 20-12