10871657

INDEX

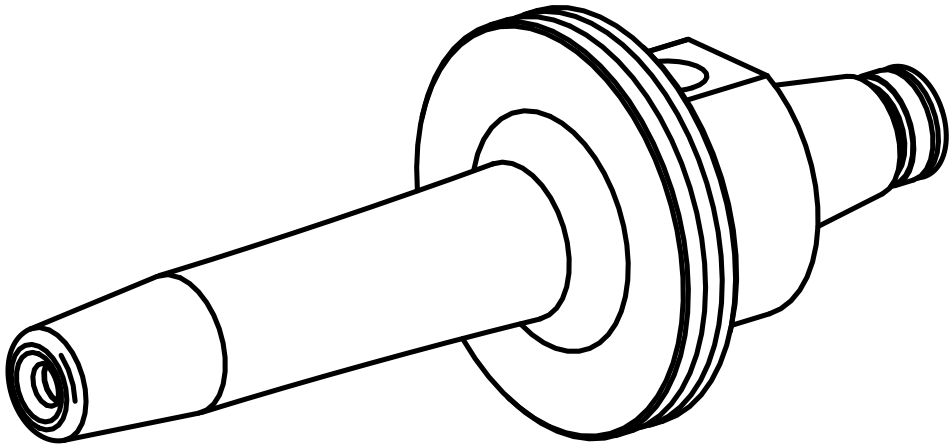

WFB 20-12

10871657

INDEX

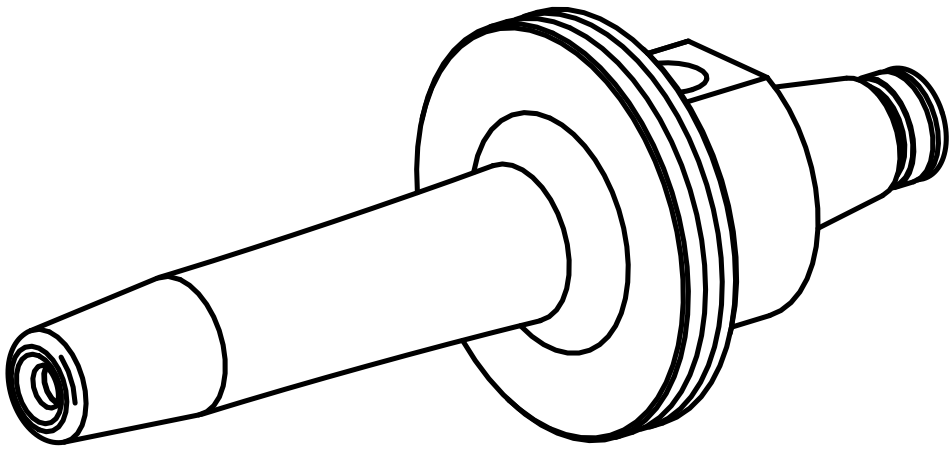

WFB 20-12