10923664 **INDEX**

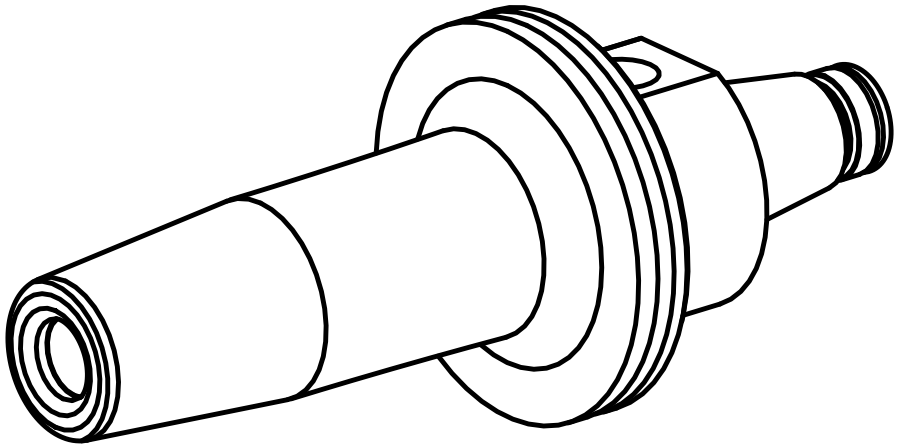

WFB 20-12

10923664 **INDEX**

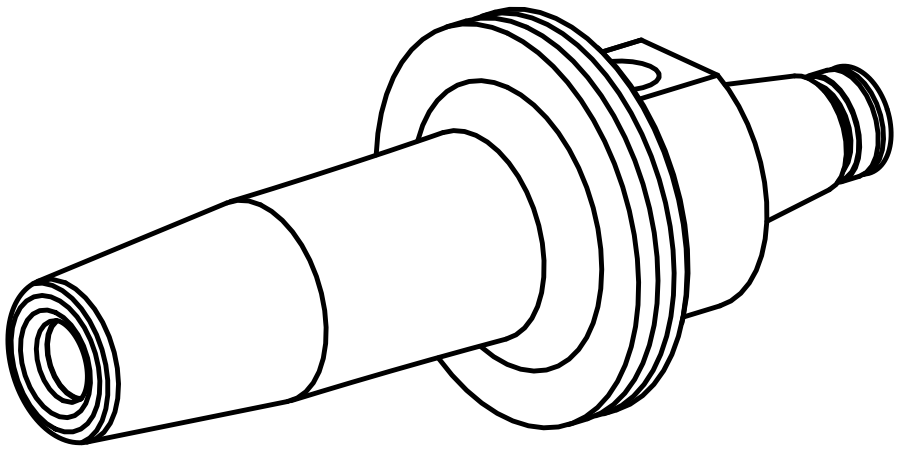

WFB 20-12