10323304

INDEX

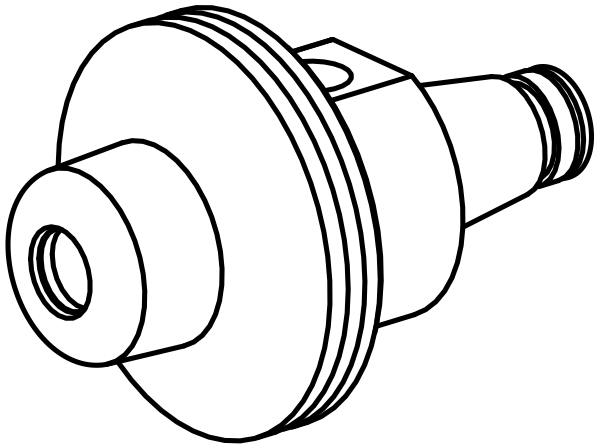

WFB 20-12

10323304

INDEX

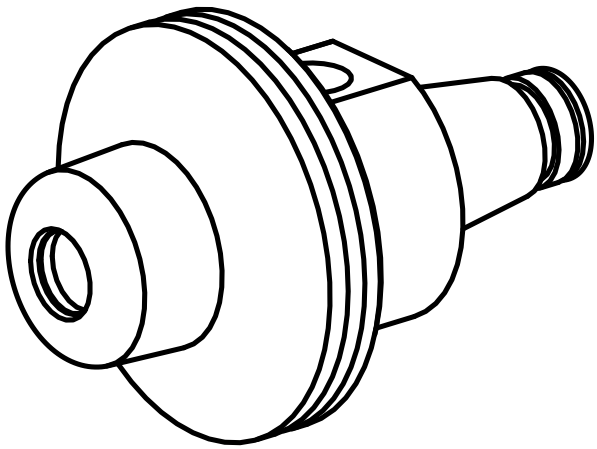

WFB 20-12