10132538

INDEX

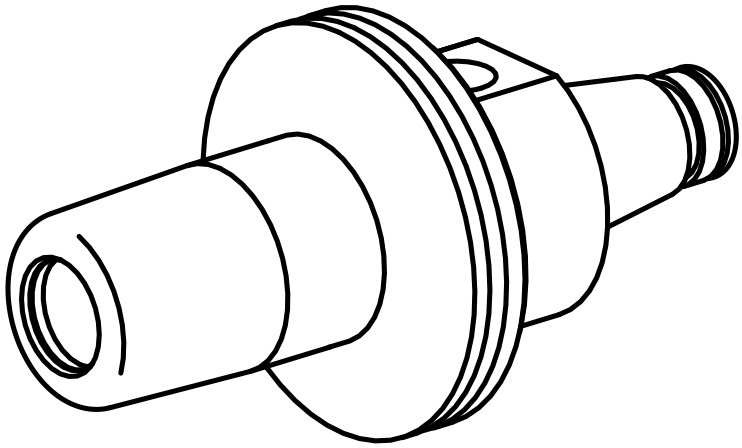

WFB 20-12

10132538

INDEX

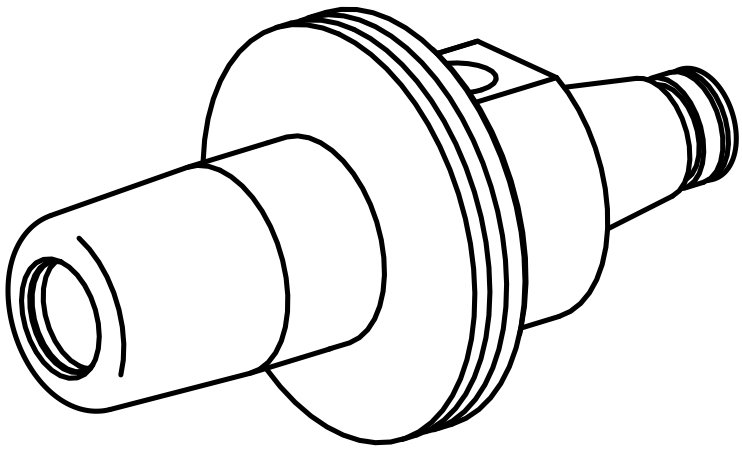

WFB 20-12