10072536

INDEX

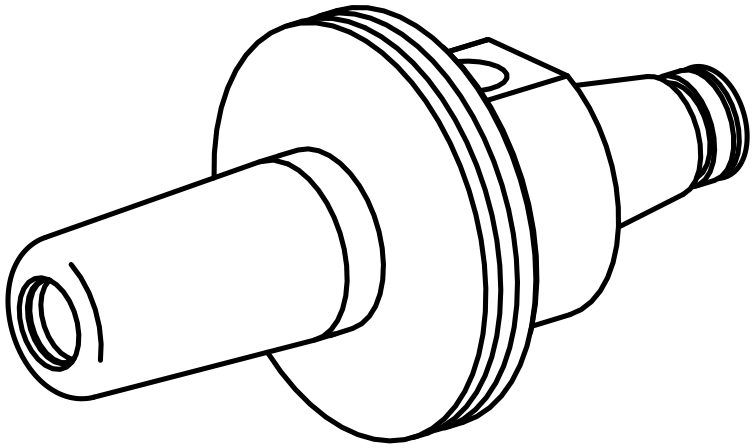

WFB 20-12

10072536

INDEX

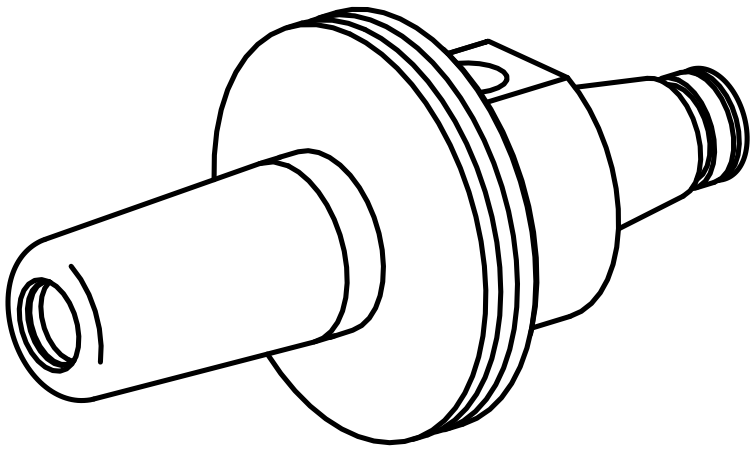

WFB 20-12