12095573 **INDEX**

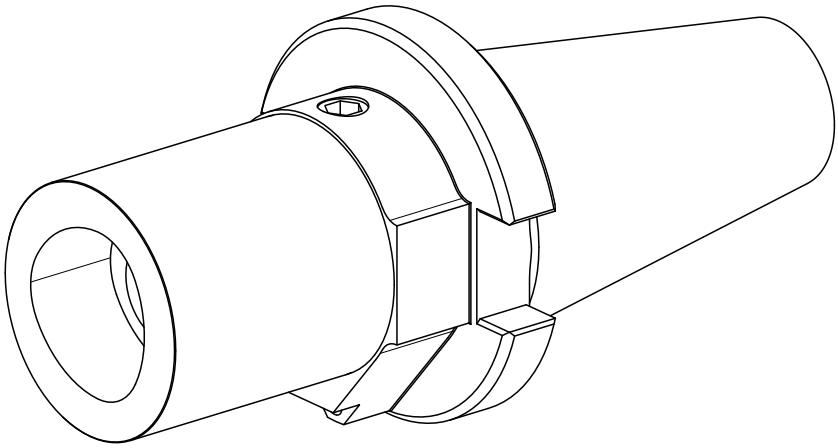

Adapter for presetting units

12095573 **INDEX**

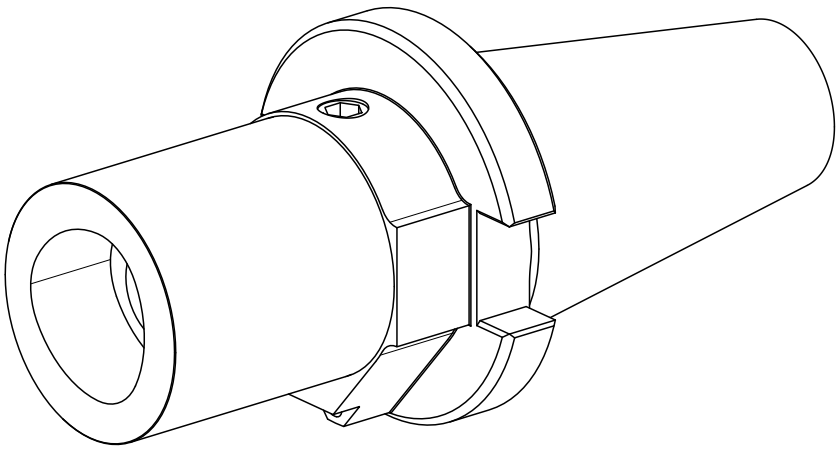

Adapter for presetting units