10080767

INDEX

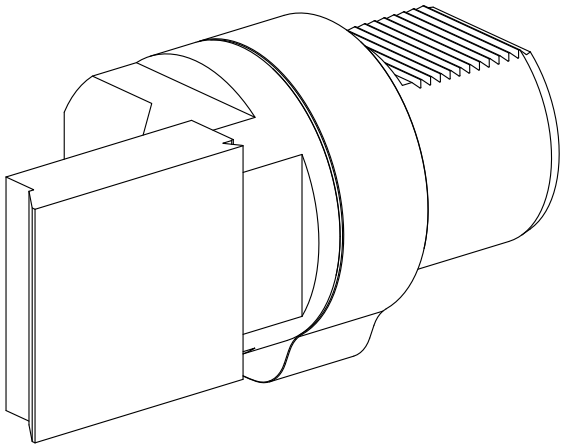

Adapter for presetting units

10080767

INDEX

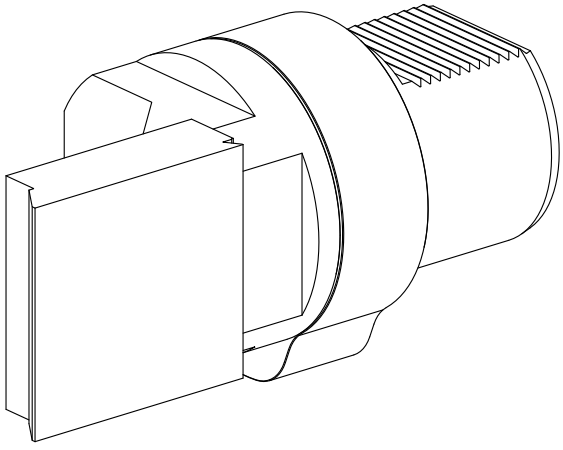

Adapter for presetting units