12103458 **INDEX**

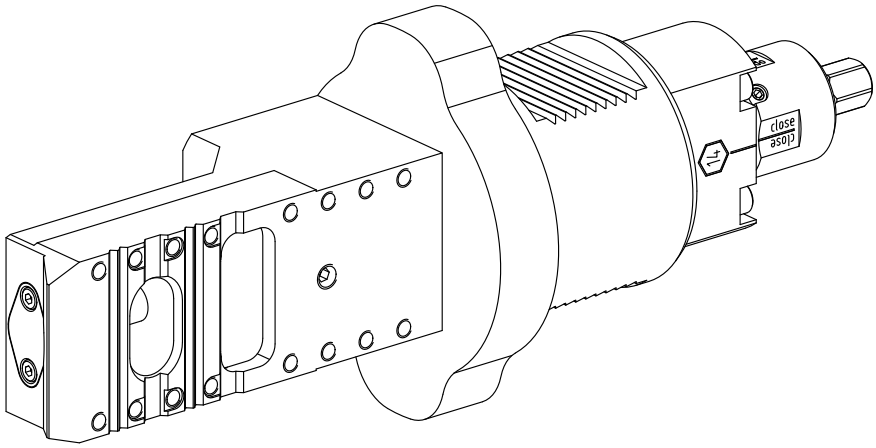

Adapter for presetting units

12103458 **INDEX**

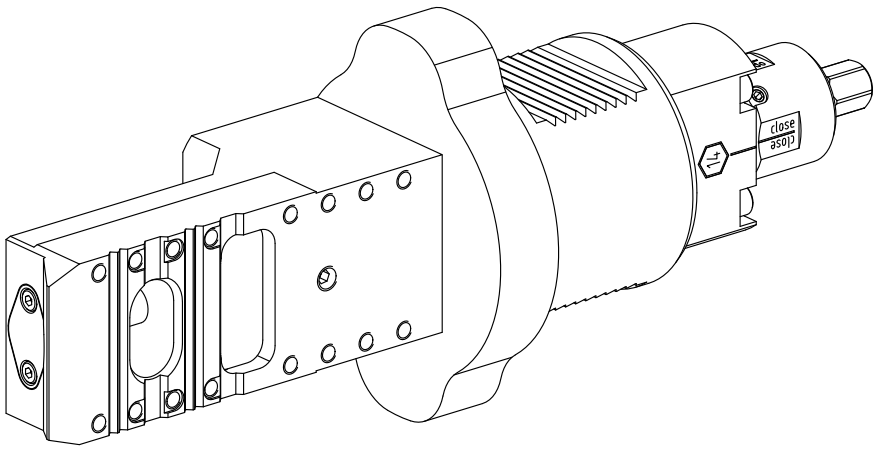

Adapter for presetting units