12102653

INDEX

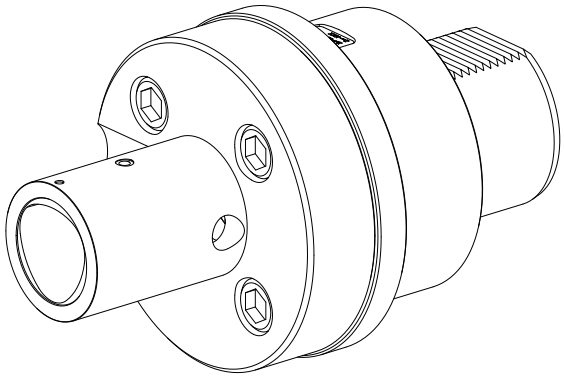

Adapter for presetting units

12102653

INDEX

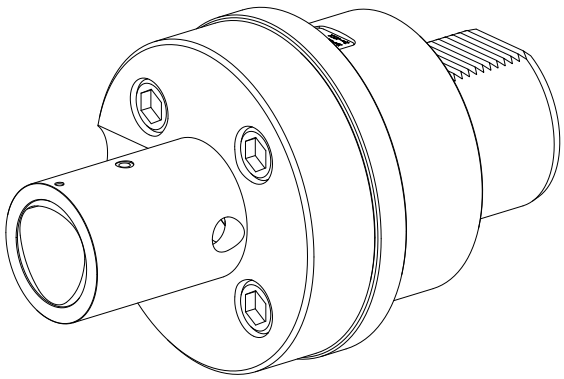

Adapter for presetting units