10611098

INDEX

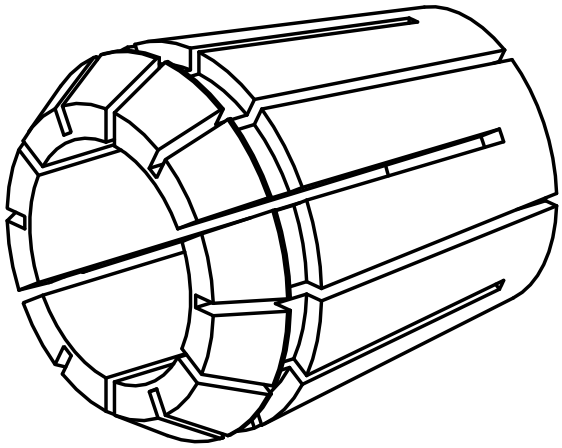

ER-Collet chuck

10611098

INDEX

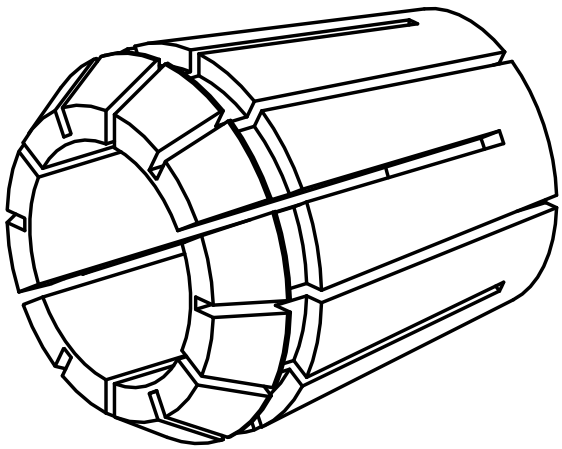

ER-Collet chuck