10134947

INDEX

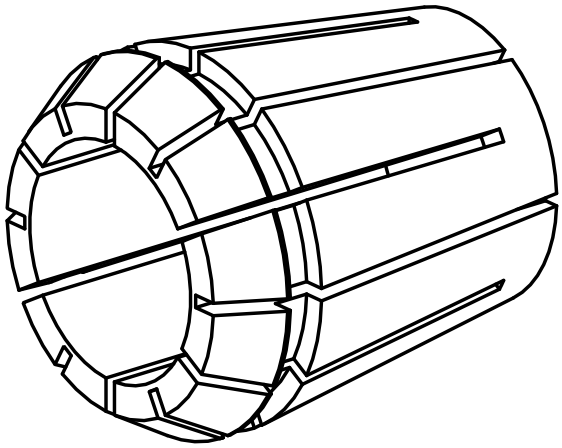

ER-Collet chuck

10134947

INDEX

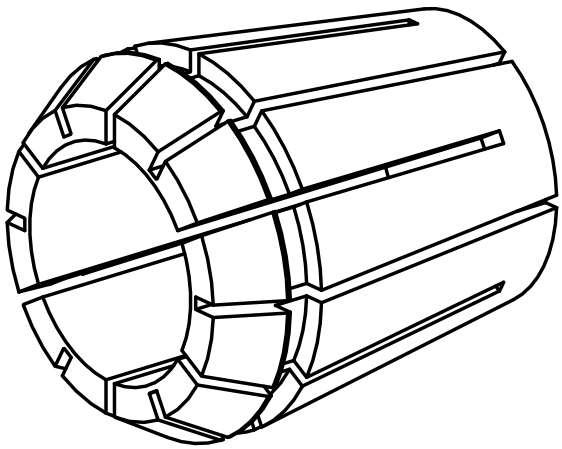

ER-Collet chuck