10618525

INDEX

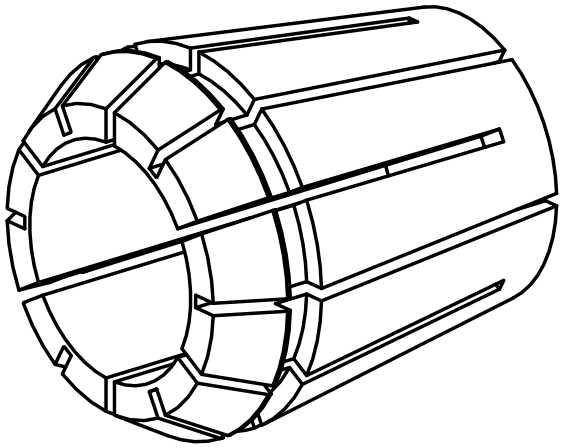

ER-Collet chuck

10618525

INDEX

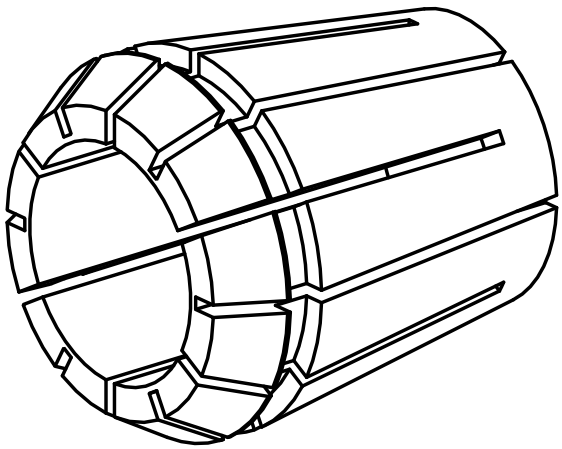

ER-Collet chuck