10566467 **INDEX**

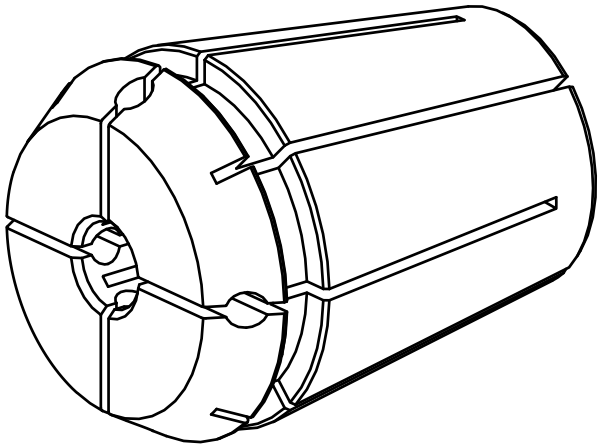

ER-Collet chuck, sealed

10566467 **INDEX**

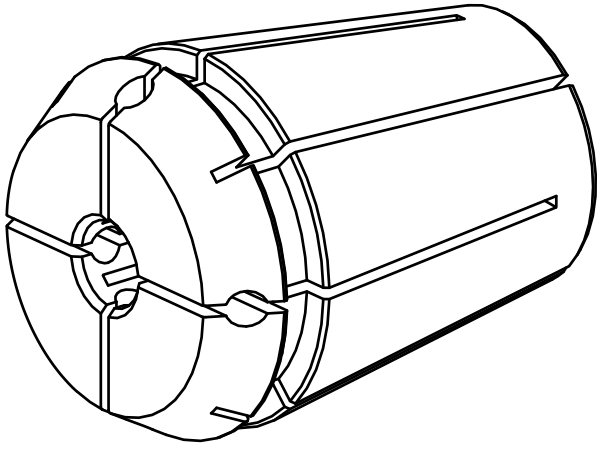

ER-Collet chuck, sealed