10468270

INDEX

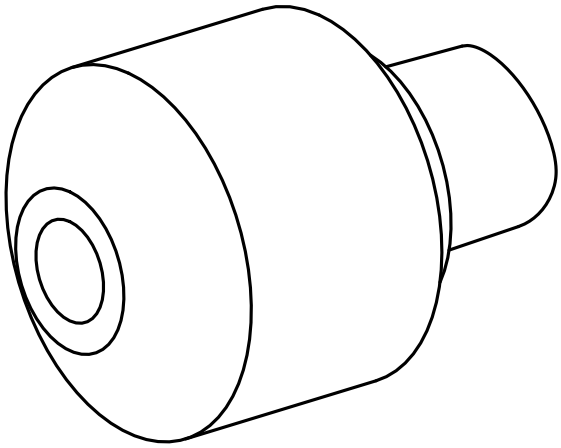

INDEX CAPTO C3

10468270

INDEX

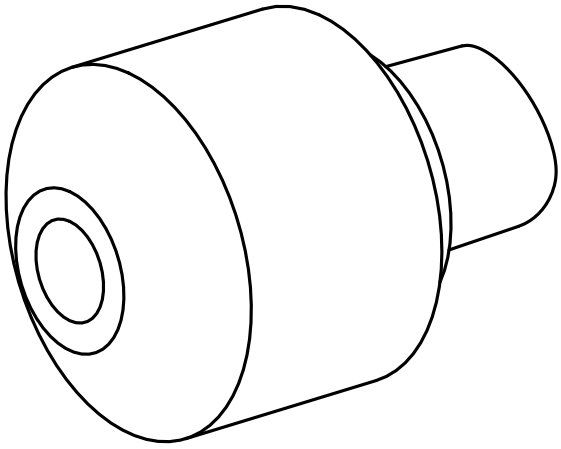

INDEX CAPTO C3