10753165

INDEX

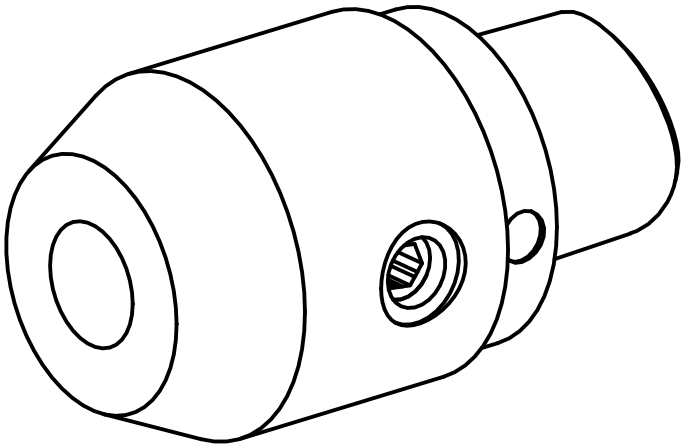

INDEX CAPTO C3

10753165

INDEX

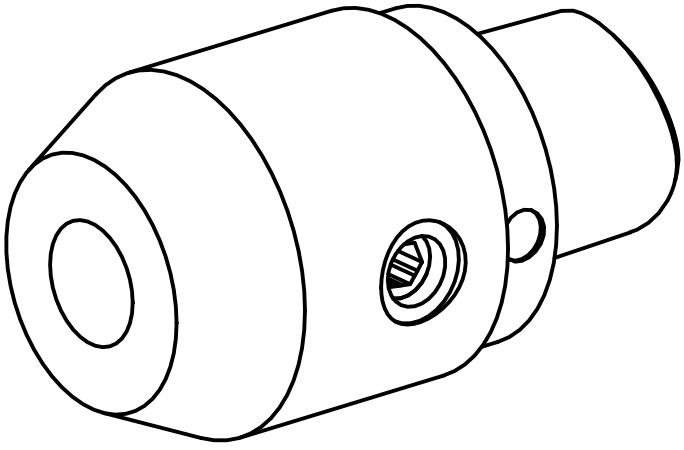

INDEX CAPTO C3