10080001

INDEX

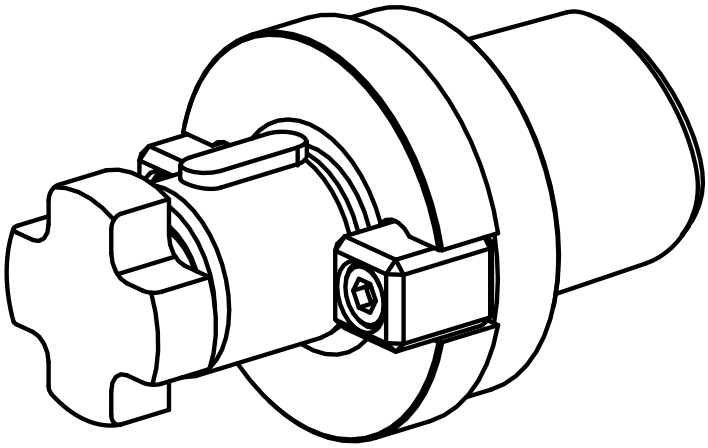

INDEX CAPTO C3

10080001

INDEX

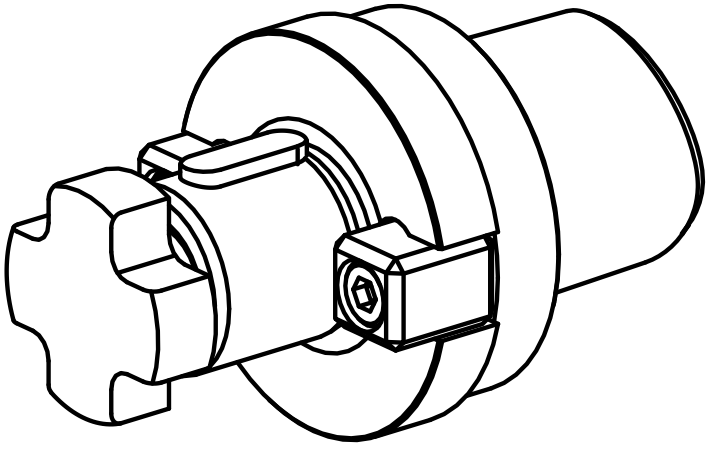

INDEX CAPTO C3