10023359

INDEX

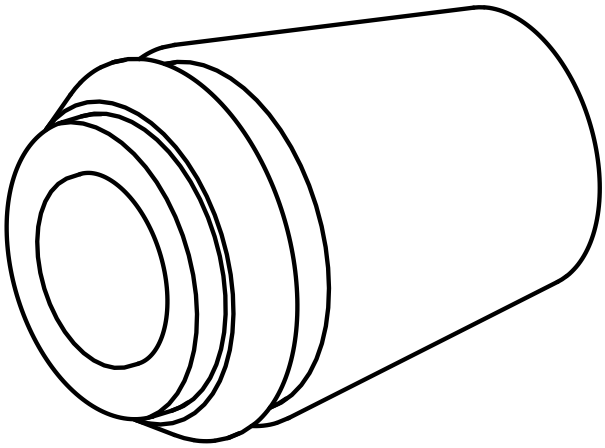

ER-shrink collet

10023359

INDEX

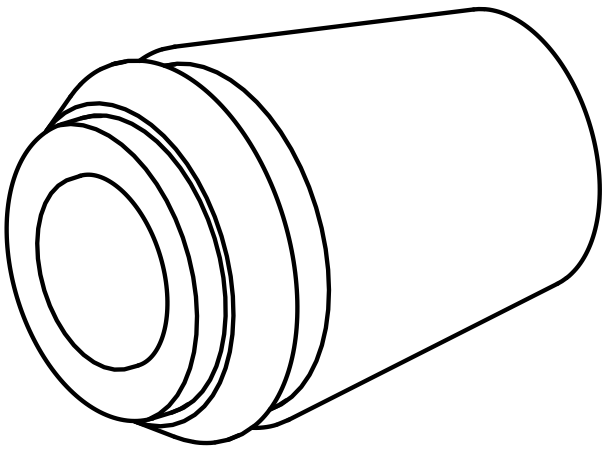

ER-shrink collet