10307584

INDEX

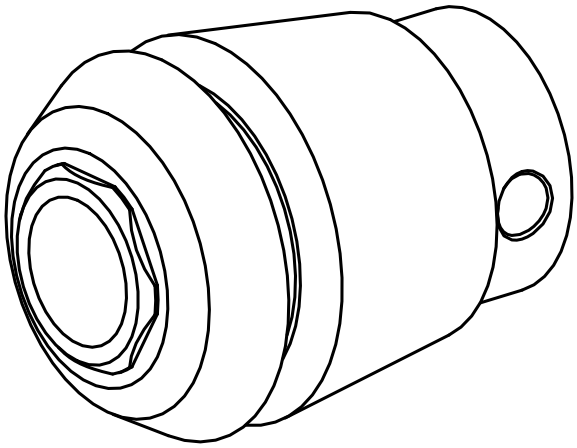

ER-Collet chuck for taps

10307584

INDEX

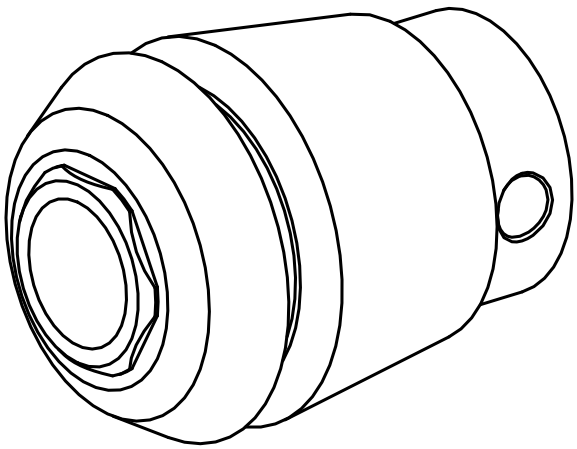

ER-Collet chuck for taps