10680612

INDEX

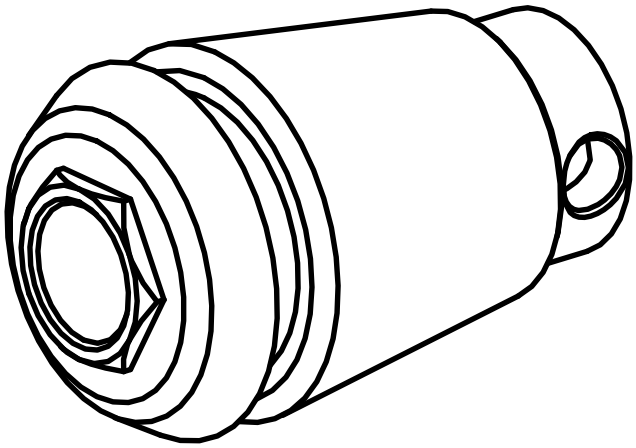

ER-Collet chuck for taps

10680612

INDEX

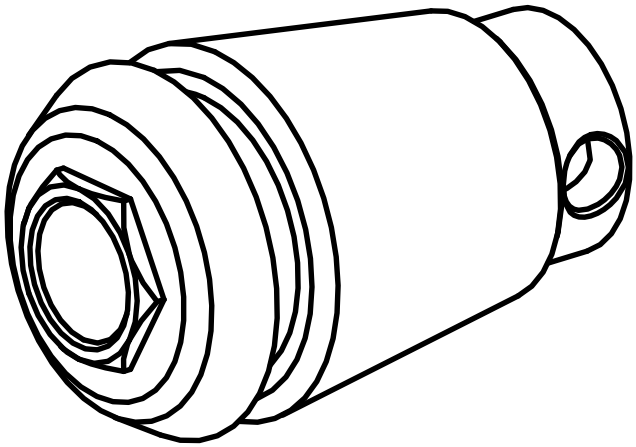

ER-Collet chuck for taps