10573027

INDEX

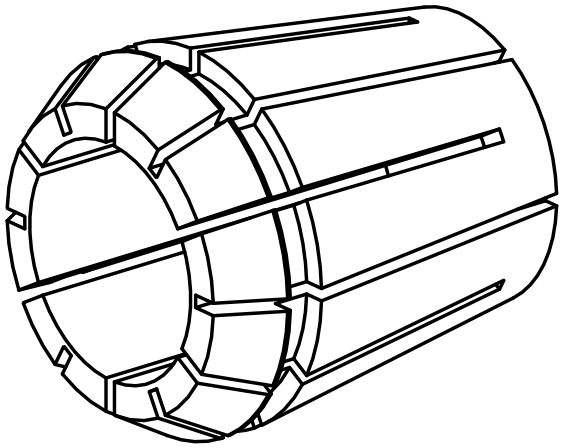

ER-Collet chuck

10573027

INDEX

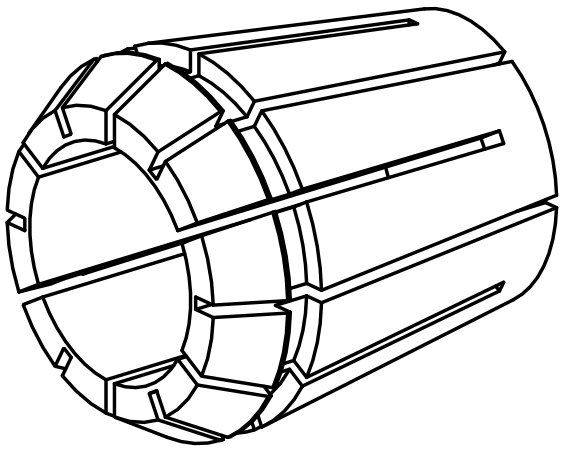

ER-Collet chuck