**10573027**

# INDEX

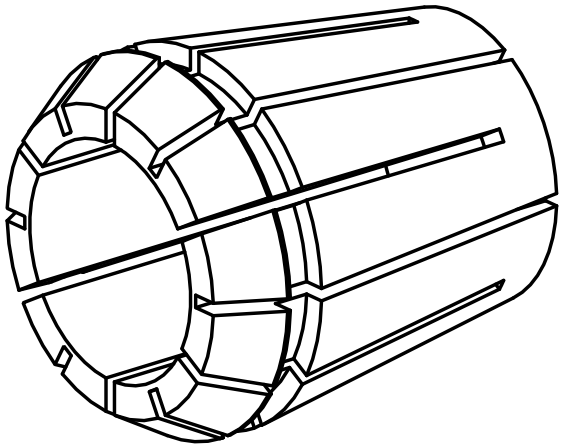

**ER-Collet chuck**

**10573027**

# INDEX

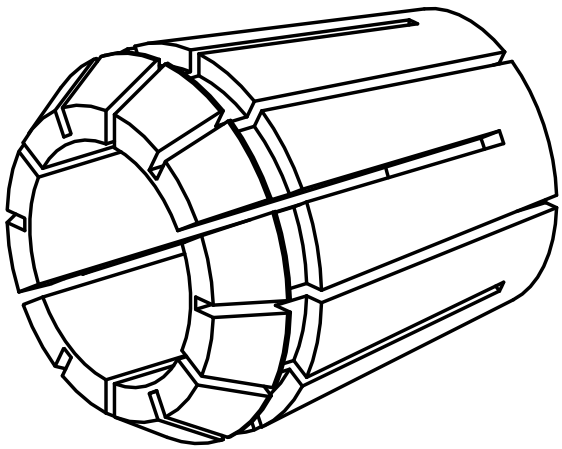

**ER-Collet chuck**