10580593

INDEX

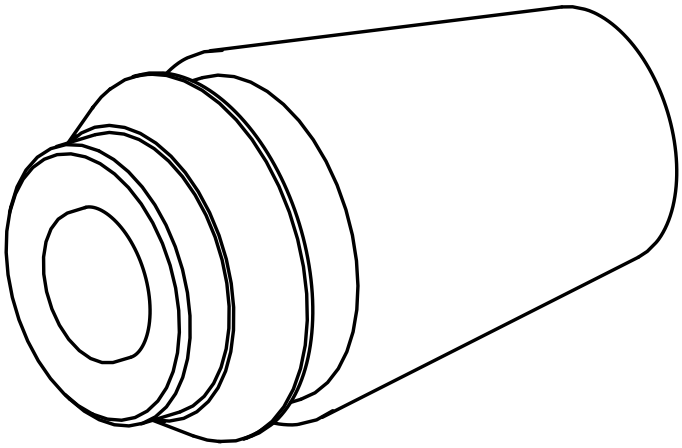

ER-shrink collet

10580593

INDEX

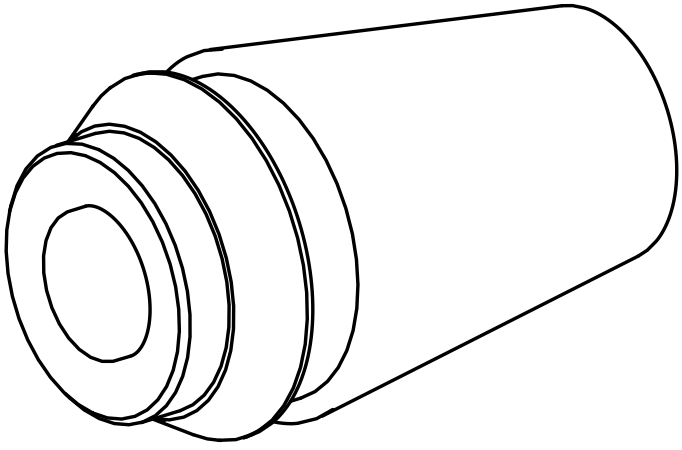

ER-shrink collet