10324366

INDEX

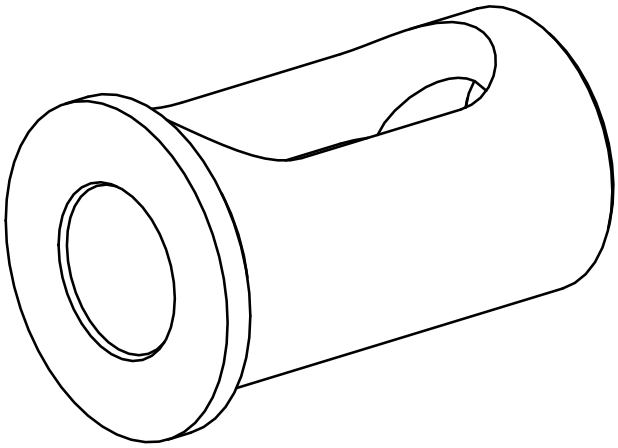

Mounting sleeve with collar

10324366

INDEX

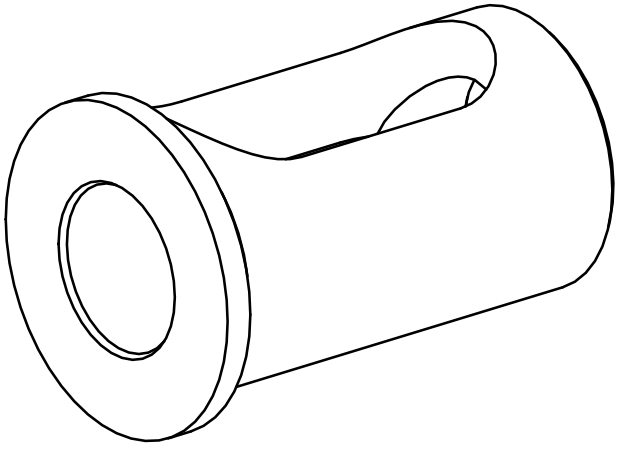

Mounting sleeve with collar