10289725

INDEX

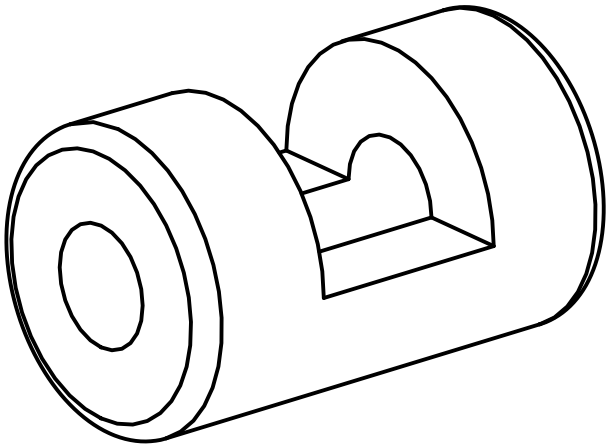

Clamping sleeve

10289725

INDEX

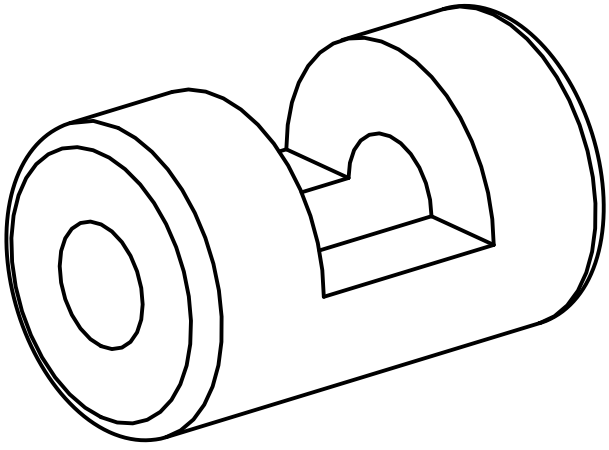

Clamping sleeve