10444808

INDEX

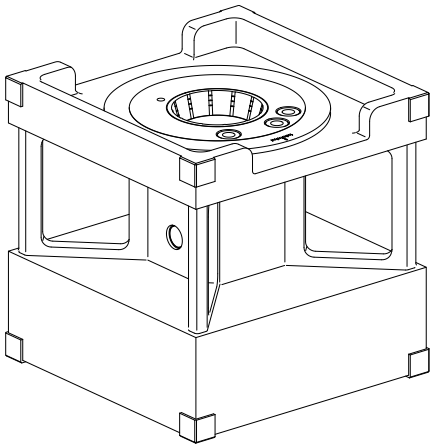

Pre-adjustment block

10444808

INDEX

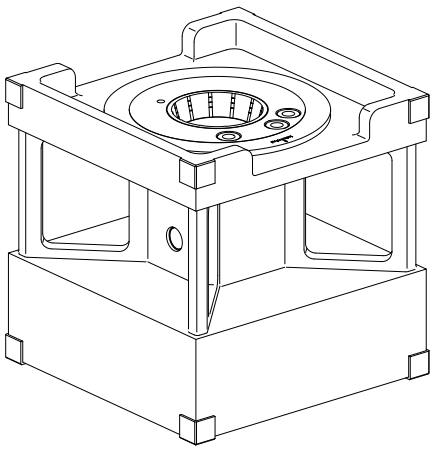

Pre-adjustment block