10023878

INDEX

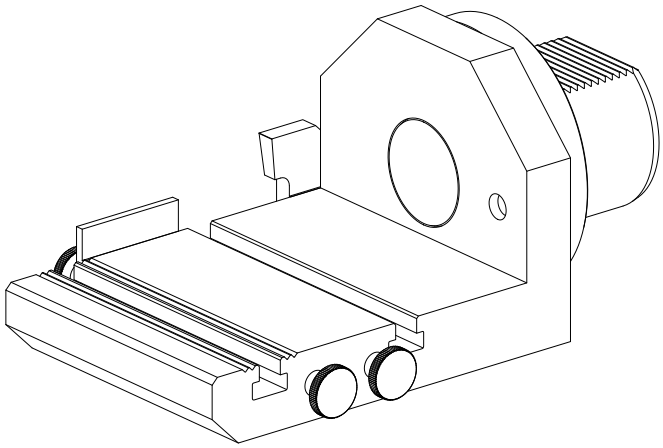

Adapter for presetting units

10023878

INDEX

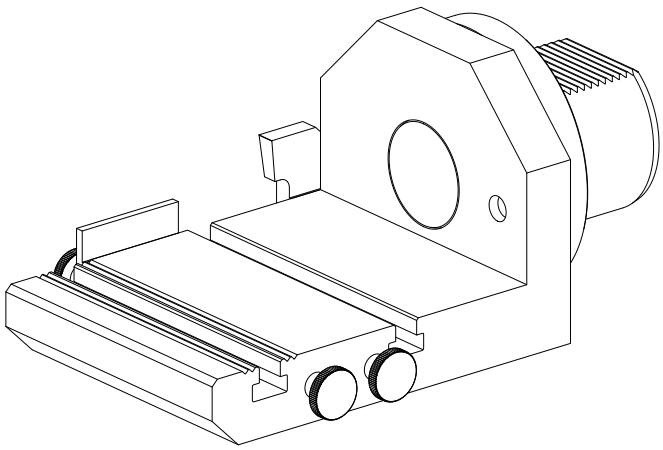

Adapter for presetting units