10094249

INDEX

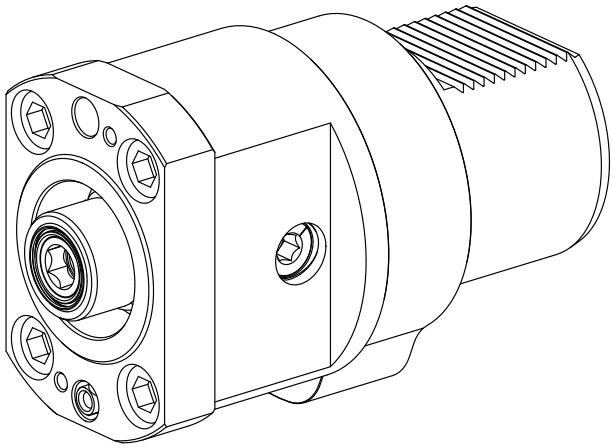

Adapter for presetting units

10094249

INDEX

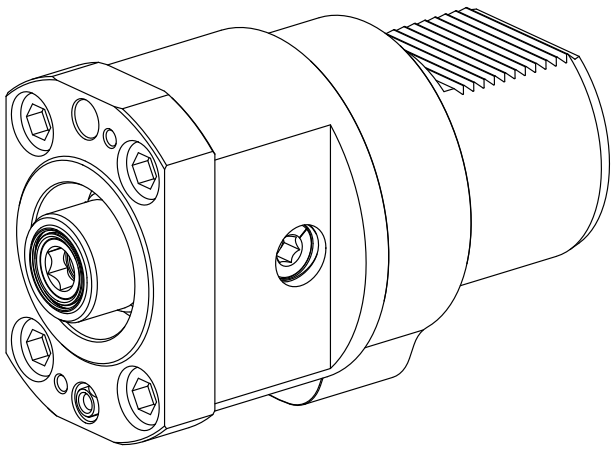

Adapter for presetting units