10460917

INDEX

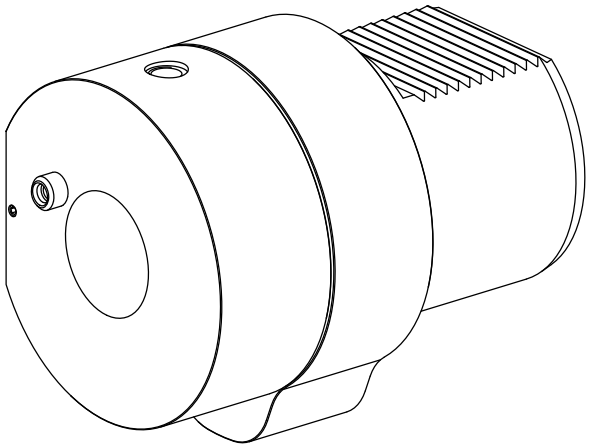

Adapter for presetting units

10460917

INDEX

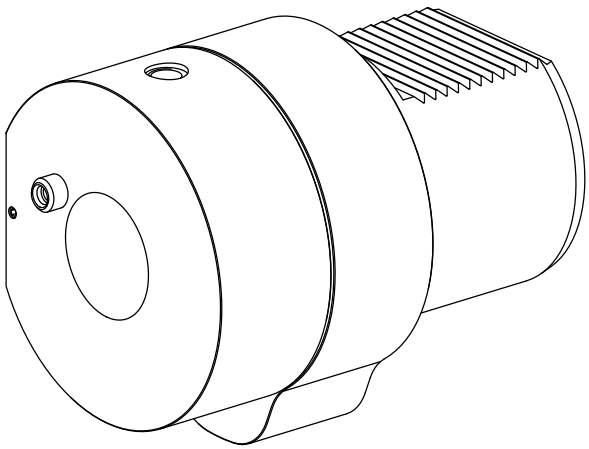

Adapter for presetting units