10199408

INDEX

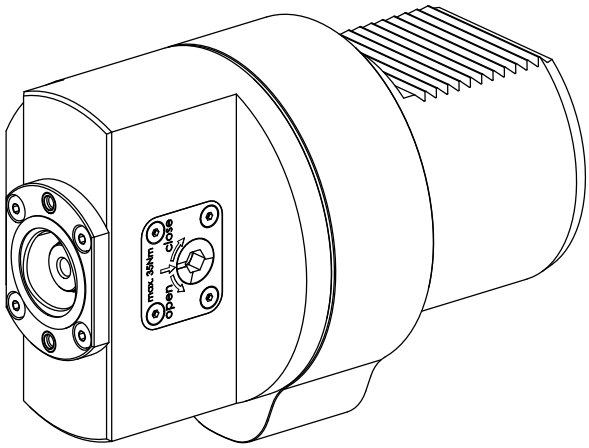

Adapter for presetting units

10199408

INDEX

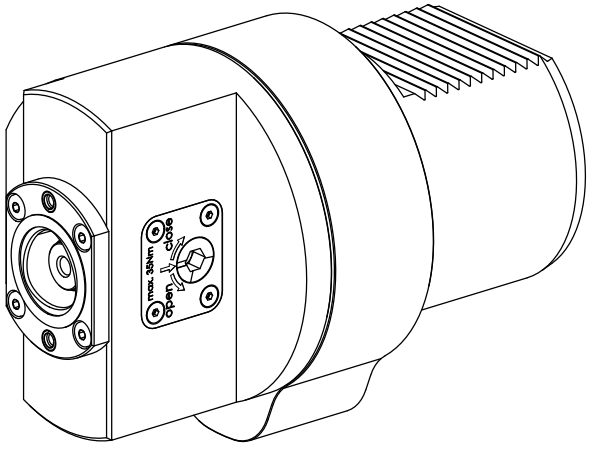

Adapter for presetting units