10875121

INDEX

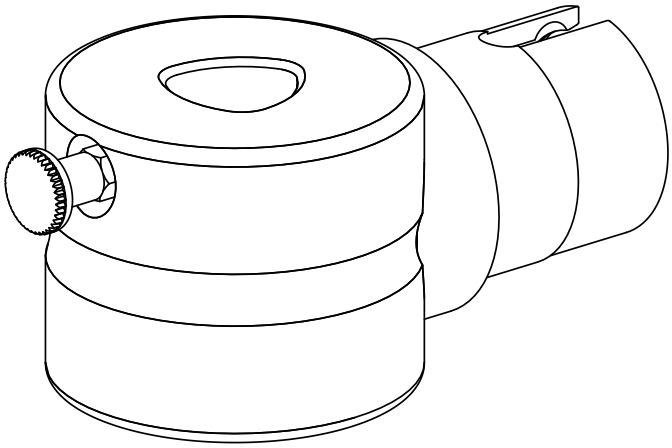

Adapter mounting aid

10875121

INDEX

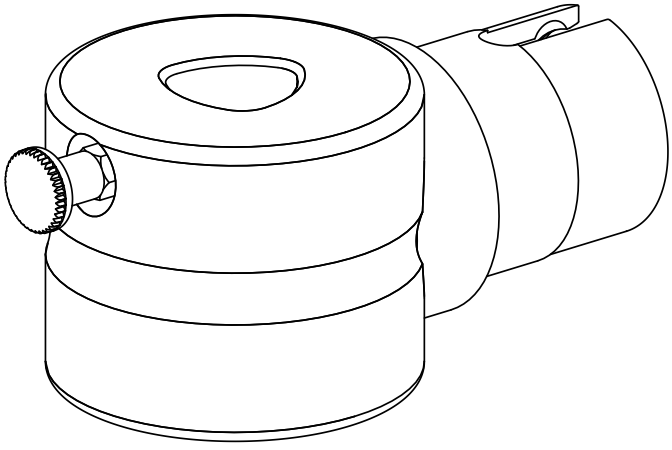

Adapter mounting aid