# 10626722

INDEX

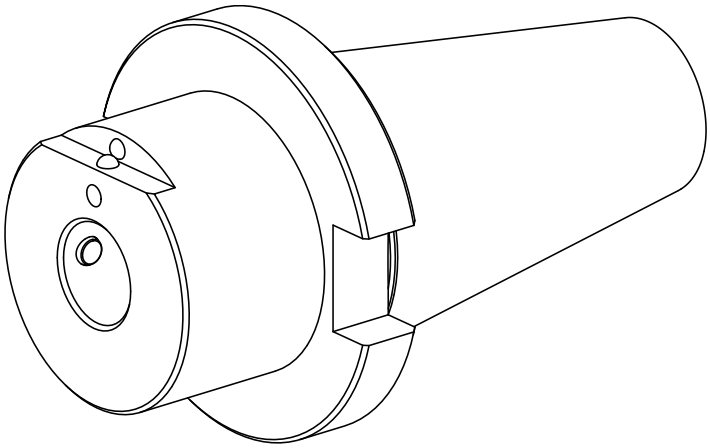

**Adapter for presetting units**


# 10626722

INDEX


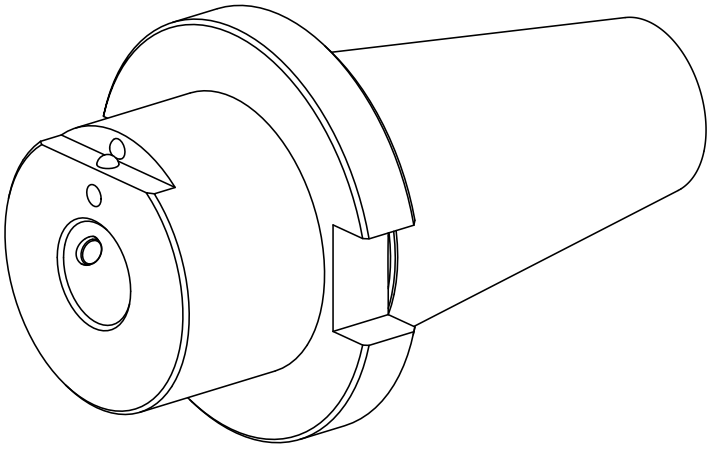


**Adapter for presetting units**