12021860

INDEX

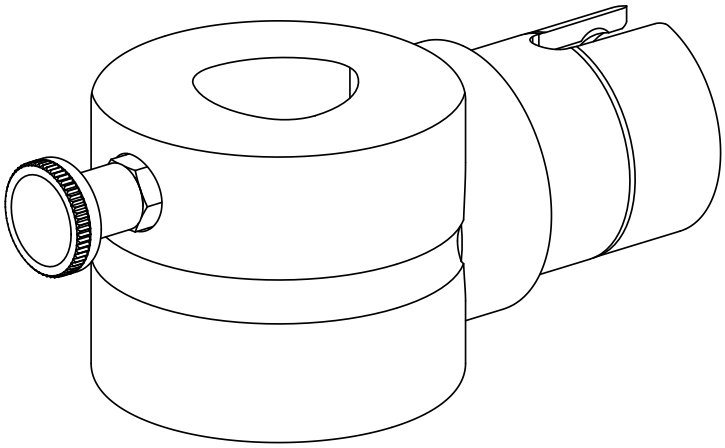

Adapter mounting aid

12021860

INDEX

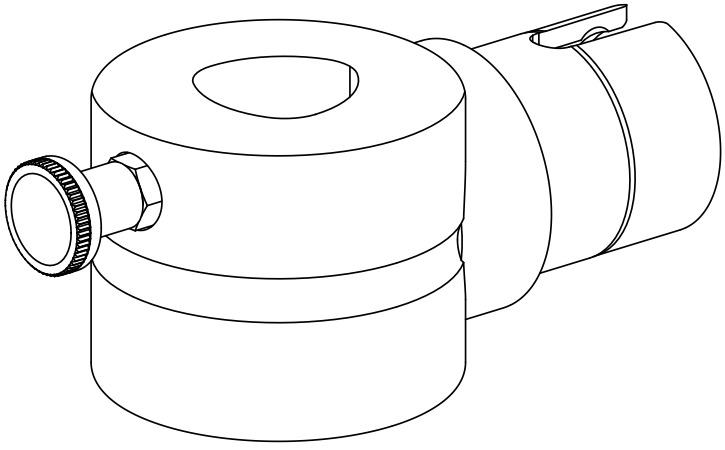

Adapter mounting aid