10591158

INDEX

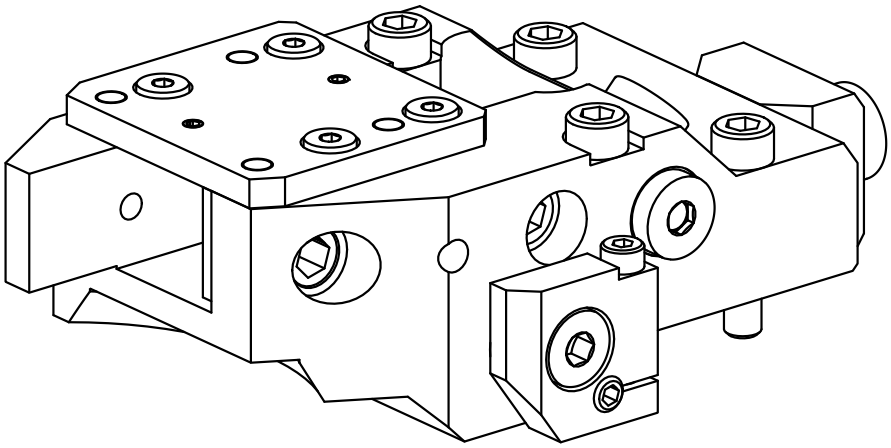

MS16/MS22

10591158

INDEX

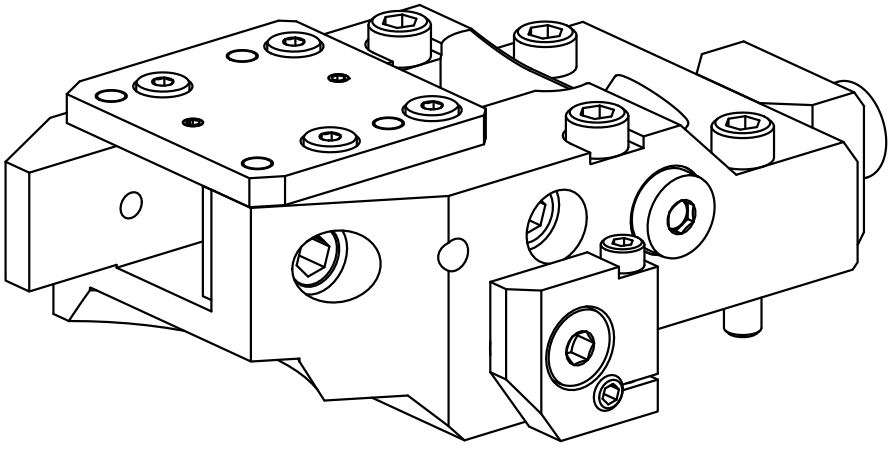

MS16/MS22