10480870

INDEX

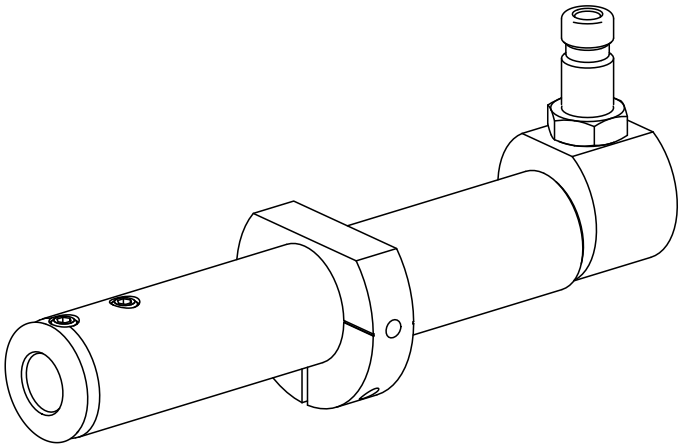

10480870
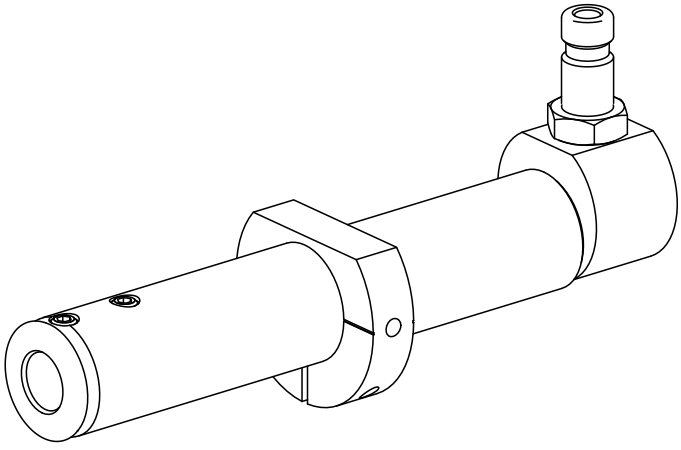
INDEX