10690799

INDEX

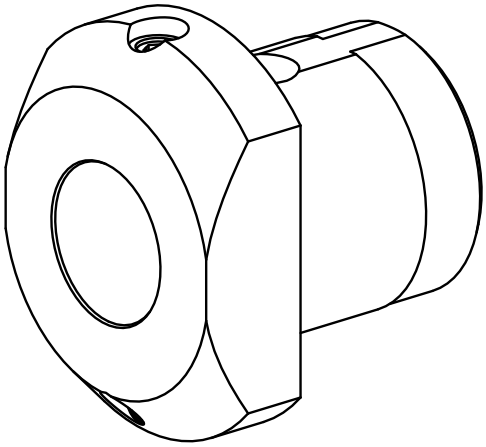

10690799
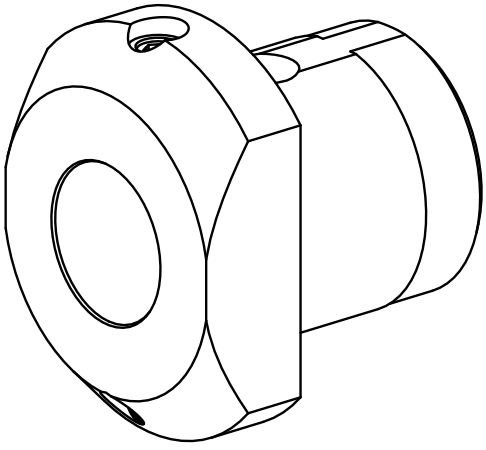
INDEX